APPAREO iot

Gateway 300

Data Sheet

Advanced communication computing platform for mobile equipment applications

Description

The Gateway 300 is a lightweight and affordable computing platform that provides a wide range of communications technologies: WiFi, Bluetooth, cellular, Iridium satellite, GPS, 433 MHz, and controller-area networking (CAN).

The Gateway 300 is built with a rugged enclosure for use outdoors and for mounting on heavy machinery. A full-featured software development kit (SDK) is available for simplified custom application development.

Features

- 6x CAN bus
- Digital I/O
- RS232 serial
- 802.11 B/G/N WiFi
- Bluetooth V2.0/4.0
- GSM/CDMA cellular radio
- GPS
- Short-range 433 MHz radio
- Iridium satellite radio
- Dual-core ARM Cortex A9
- 4 GB eMMC standard storage
- 512 MB DDR3L RAM
- Embedded Linux
- SDK for custom applications
- IP67 environmental rating
- Low power mode

Applications

- Machine control
- Telematics
- Virtual terminal support

Regulatory and Network Certification

- Iridium Network
- Verizon Network
- Vodafone
- CE
- IC
- FCC

APPAREO iot

Gateway 300
Data Sheet

Block Diagram

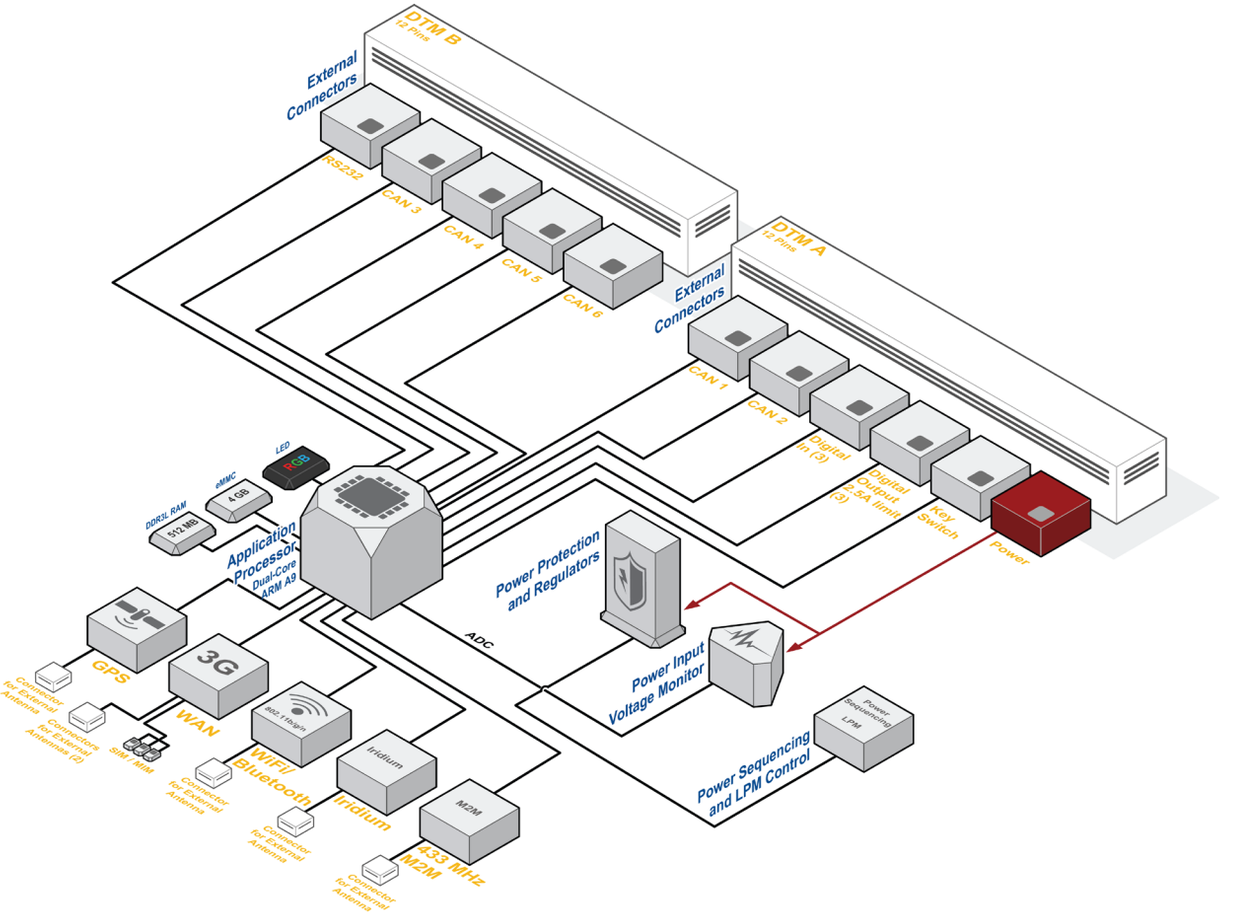

Input/Output

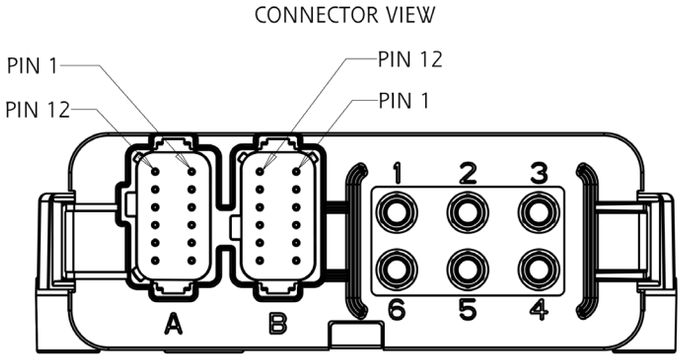

SMA Connector	Function
1	Bluetooth/WiFi
2	Iridium
3	433-MHz
4	Cellular Main
5	GPS
6	Cellular Diversity

Connector: Pin	Signal Name	Function
A:1	POWER_UNSWITCHED	Vehicle Battery Power (12V nominal)
A:2	GND	Power Ground
A:3	DIGITAL_IN_1	Digital Input Signal
A:4	DIGITAL_IN_0	Digital Input Signal
A:5	CAN2_HIGH	CANBus 2 High
A:6	CAN1_HIGH	CANBus 1 High
A:7	CAN1_LOW	CANBus 1 Low
A:8	CAN2_LOW	CANBus 2 Low
A:9	DIGITAL_OUT_0	Digital Output Signal (12V nominal)
A:10	DIGITAL_OUT_1	Digital Output Signal (12V nominal)
A:11	DIGITAL_OUT_2	Digital Output Signal (12V nominal)
A:12	SWITCHED_POWER	Key Switch
B:1	RS232_TX	RS-232 Serial Port Transmit
B:2	Unused	Unused
B:3	CAN6_HIGH	CANBus 6 High
B:4	CAN5_HIGH	CANBus 5 High
B:5	CAN4_HIGH	CANBus 4 High
B:6	CAN3_HIGH	CANBus 3 High
B:7	CAN3_LOW	CANBus 3 Low
B:8	CAN4_LOW	CANBus 4 Low
B:9	CAN5_LOW	CANBus 5 Low
B:10	CAN6_LOW	CANBus 6 Low
B:11	RS232_GND	RS-232 Serial Port Ground, 750-mA fused
B:12	RS232_RX	RS-232 Serial Port Receive

Absolute Maximum Ratings

Stresses beyond those listed under Absolute Maximum Ratings may cause permanent damage to the device. Exposure to any Absolute Maximum Rating conditions for extended periods may affect device reliability and lifetime.

Parameter	Value	Unit
POWER_UNSWITCHED to GND	-13.6 to 26.5	V
CANx_HIGH, CANx_LOW to GND	- 0.3 to 16.5	V
CANx_HIGH to CANx_LOW	- 0.3 to 16.5	V
SWITCHED_POWER to GND DIGITAL_IN_X to GND	- 0.3 to 16.5	V
RS232_TX to RS232_GND	- 0.3 to 16.5	V
RS232_RX to RS232_GND	- 0.3 to 16.5	V
Storage Temperature	-55 to 105	°C
Operating Temperature	-40 to 75	°C

Electrical Specifications

Symbol	Parameter	Min	Typ	Max	Unit
Power Supply					
$I_{operating}$	Idle current with digital outputs off		300		mA
I_{LPM}	Low power mode current		7	30	mA
V_{IN}	Input voltage	9	12.5	16	V
CAN Bus (Compatible with SAE J1939 and CAN 2.0B)					
$V_{DRT, CAN}$	Differential receiver threshold voltage	0.5	0.7	0.9	V
$V_{DRH, CAN}$	Differential receiver hysteresis voltage	50	120	200	mV
f_{CAN}	CAN BAUD Rate			500	kbps
$V_{OH/OL, CAN}$	Recessive Voltage		2.5		V
$V_{OH, CAN}$	Dominant Voltage		3.5		V
$V_{OL, CAN}$	Dominant Voltage		1.5		V
RS232 (Conforms to EIA/TIA 232)					
f_{RS232}	RS232 BAUD Rate		115.2		kbps
WiFi					
$n_{connections}$	Simultaneous connections			22	clients
Wireless Connections					
Z_0	Characteristic impedance		50		Ω
Digital Input/Key Switch					
$V_{KS, RISING}$	Key switch, low to high transition	3.6			V
$V_{KS, FALLING}$	Key switch, high to low transition			2.8	V
f_{DigIn}	DIGITAL_IN_0 frequency measurement	100		1000	Hz
Battery Sensor					
$V_{Batt, precision}$	Battery sensor precision			0.1	V
$V_{Batt, range}$	Battery sensor operating range	9		16	V

Mechanical

FRONT VIEW

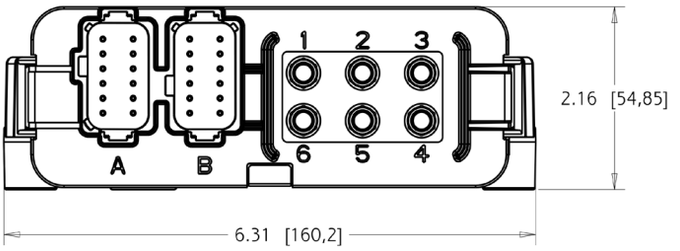

TOP VIEW

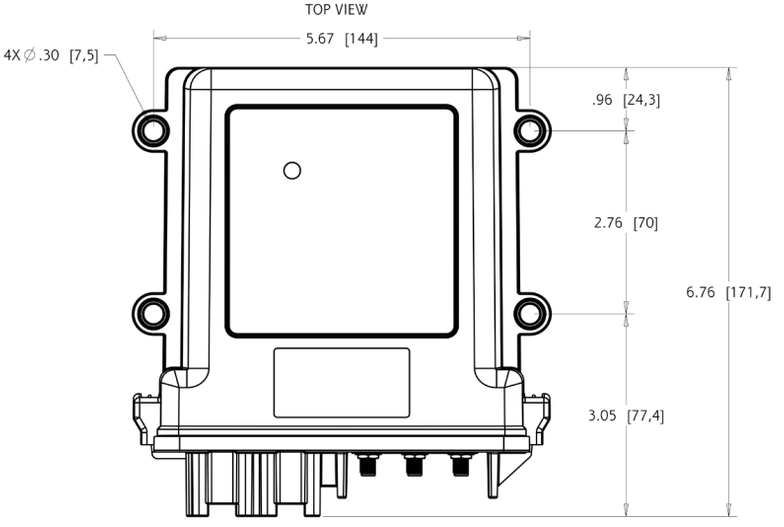

Measurement Units: Inches [mm]

Weight: 1.09 lbs

Recommended Mating Connectors:
Connector A: Deutsch DT06-12SA
Connector B: Deutsch DT06-12SB

Mounting:
Do not mount gateway with connectors facing up. Gateway must be within range of WiFi, Bluetooth, or M2M device (if applicable).

APPAREO
1810 NDSU Research Circle North
Fargo, ND 58102 USA
+1-701-356-2200
solutions@appareo.com | appareo.com

609964-000008 Rev 1.4 ©2016-17 Appareo Systems, LLC